TW 350 S
Vaccuum motor
As at: 05/12/08 Time:20:51

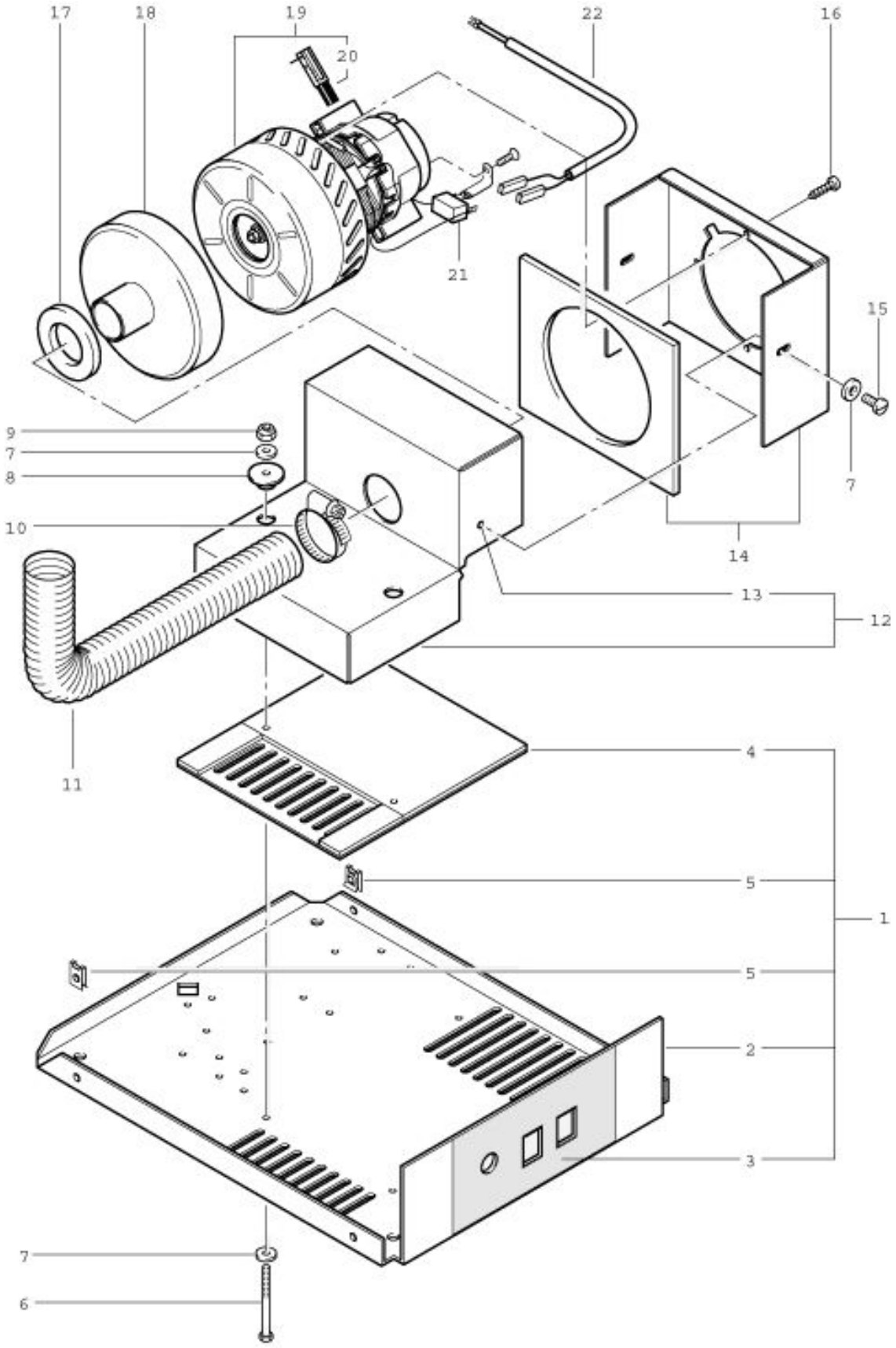

TW 350 S Saugmotor / Moteur d'aspiration / Suction motor B 2-06.20

TW 350 S
Vaccuum motor

As at: 05/12/08 Time:20:51

Pos.	Description	Reference
01	Chassis complete, including: Items 2-5	P...180
02	Bottom plate	P...181
03	Sticker with symbols	P...181D
04	Complete isolation plate	P...182A
05	Clamp B 4.8	P...494B
06	Hexagon screw M 5x70 mm	P...470P
07	Washer M5	P...497V
08	Isolating washer dm 14/29.5	P...208D
09	Stop-nut M5	P...492G
10	Clamp 32-50 mm	P...206D
11	Connecting hose 40x300 mm	P...206C
12	Motor housing, alu	P...208A
13	Nut M5	P...495K
14	Cover with absorbing sheet	P...208H
15	Screw M 5x12 mm	P...475Q
16	Screw dm 4.8x13 mm	P...482L
17	Sealing ring dm 60/38x5 mm	P...206B
18	Hose connection cap dm 40/144	P...206A
19	Suction motor 1000 Watt	P...870
20	Carbon brushes OEP	P...870KB
21	Capacitor with clamp	P...387C
22	cable tree blue	P...423